i classic

CXT-6006-XXXX

CLOSED

WILD CHERRY
CXT-6006-7054
SHOWN

OPEN

STANDARD PART NUMBERS AND AVAILABLE COLORS**

FROSTY WHITE	FUSION MAPLE	BANNISTER OAK	FONTHILL PEAR	WILD CHERRY	BRIGHTON WALNUT	OTHER COLORS CALL PROXIMITY
CXT-6006-1573	CXT-6006-7909	CXT-6006-7806	CXT-6006-10745	CXT-6006-7054	CXT-6006-7922	CXT-6006-9999

CXT284909T3NNNFNND

PROXIMITY®

WWW.PROXIMITYSYSTEMS.COM | TEL: 800-437-8111

SPECIFICATIONS

*ASSUMES VESA HOLE PATTERN IS CENTERED ON MONITOR

EQUIPMENT	MAX SIZE DIMENSIONS
CPU	22"W x 11 1/2"H x 7"D
*MONITOR	24"W x 15"H x 3"D
KEYBOARD/MOUSE AREA	22"W x 20"D

ALL DIMENSIONS ARE IN INCHES UNLESS NOTED OTHERWISE. DESIGN SUBJECT TO CHANGE WITH EQUIPMENT SPECIFICATIONS. ALL INFORMATION ON THIS DRAWING IS PROPRIETARY AND MAY NOT BE USED WITHOUT PERMISSION FROM PROXIMITY SYSTEMS, INC. © 2016.

OPTIONAL ACCESSORIES/PART NO. *(NOT INCLUDED)*

1. SLOPPED CABINET TOP: AC-CTOP-9-XXXX
2. COVER FOR RECESSED STORAGE: AC-CNTR-CVR
3. LED LIGHT: AC-LED-LGHT

CXT-6006-XXXX

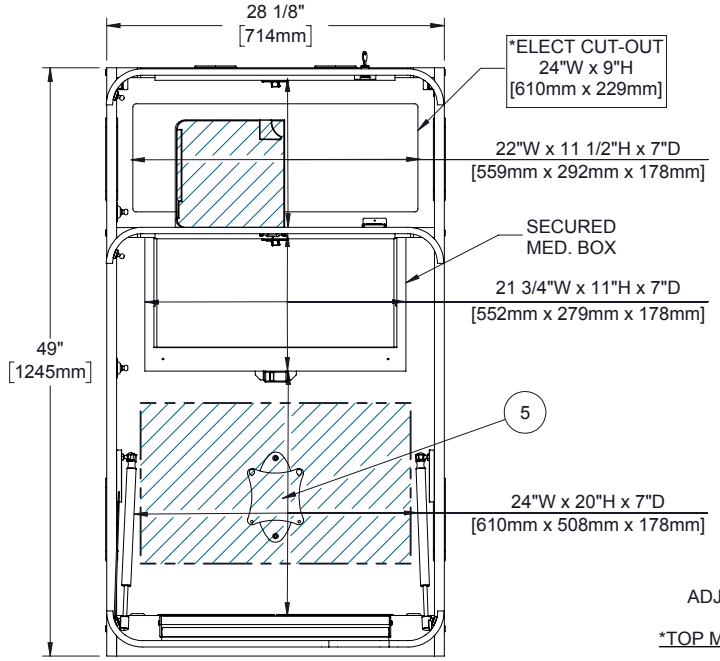

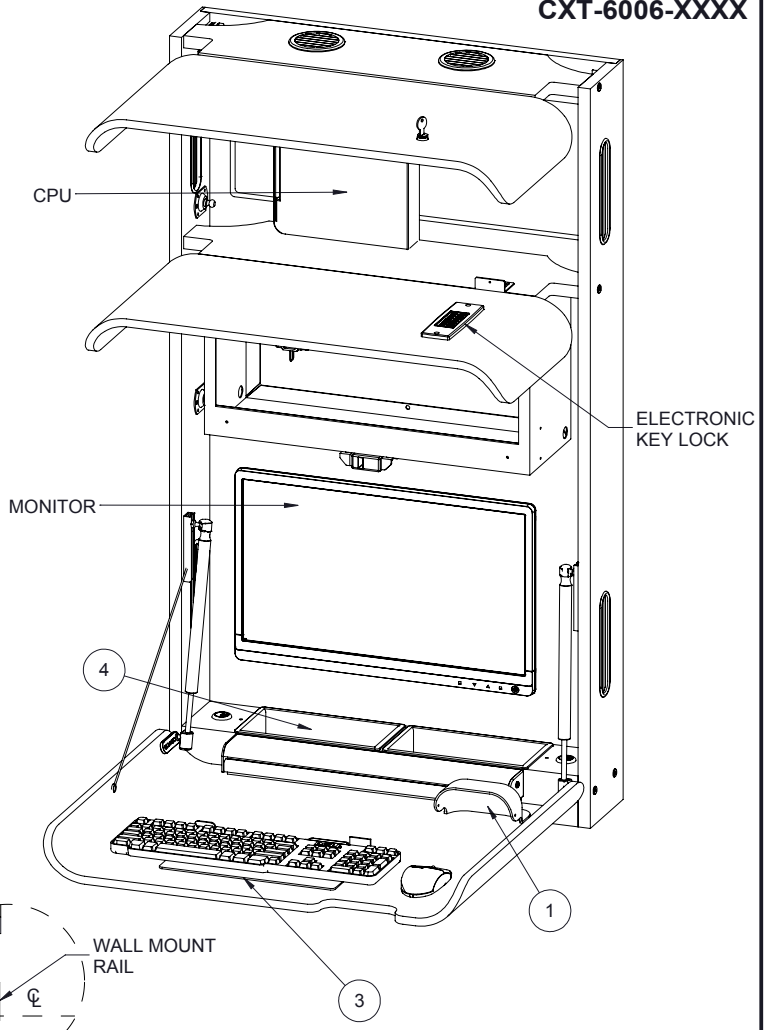

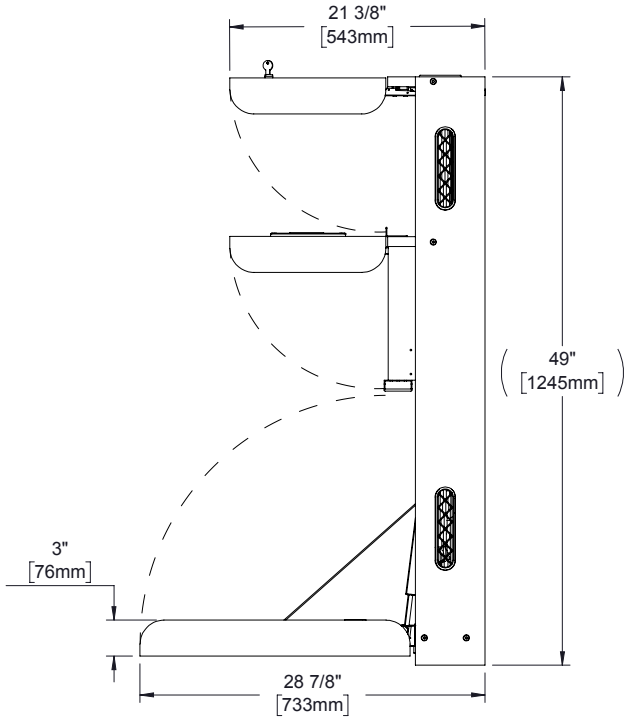

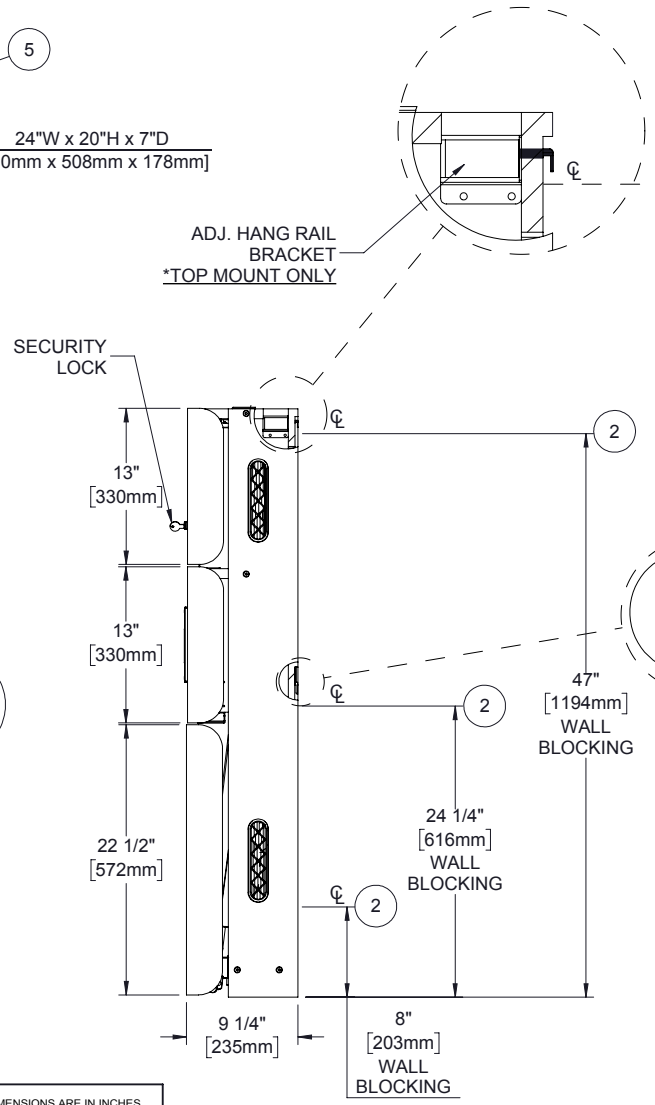

CXT284909T3NNNFNND

COMPONENTS INCLUDED	
ITEM NO.	COMPONENTS
1	MOUSE CATCHER
2	WALL MOUNT RAIL SYSTEM
3	KEYBOARD TRAY
4	RECESSED STORAGE
5	MONITOR TILT MOUNT

PROXIMITY®

WWW.PROXIMITYSYSTEMS.COM | TEL: 800-437-8111

ALL DIMENSIONS ARE IN INCHES UNLESS NOTED OTHERWISE. DESIGN SUBJECT TO CHANGE WITH EQUIPMENT SPECIFICATIONS. ALL INFORMATION ON THIS DRAWING IS PROPRIETARY AND MAY NOT BE USED WITHOUT PERMISSION FROM PROXIMITY SYSTEMS, INC. © 2016.

R: A